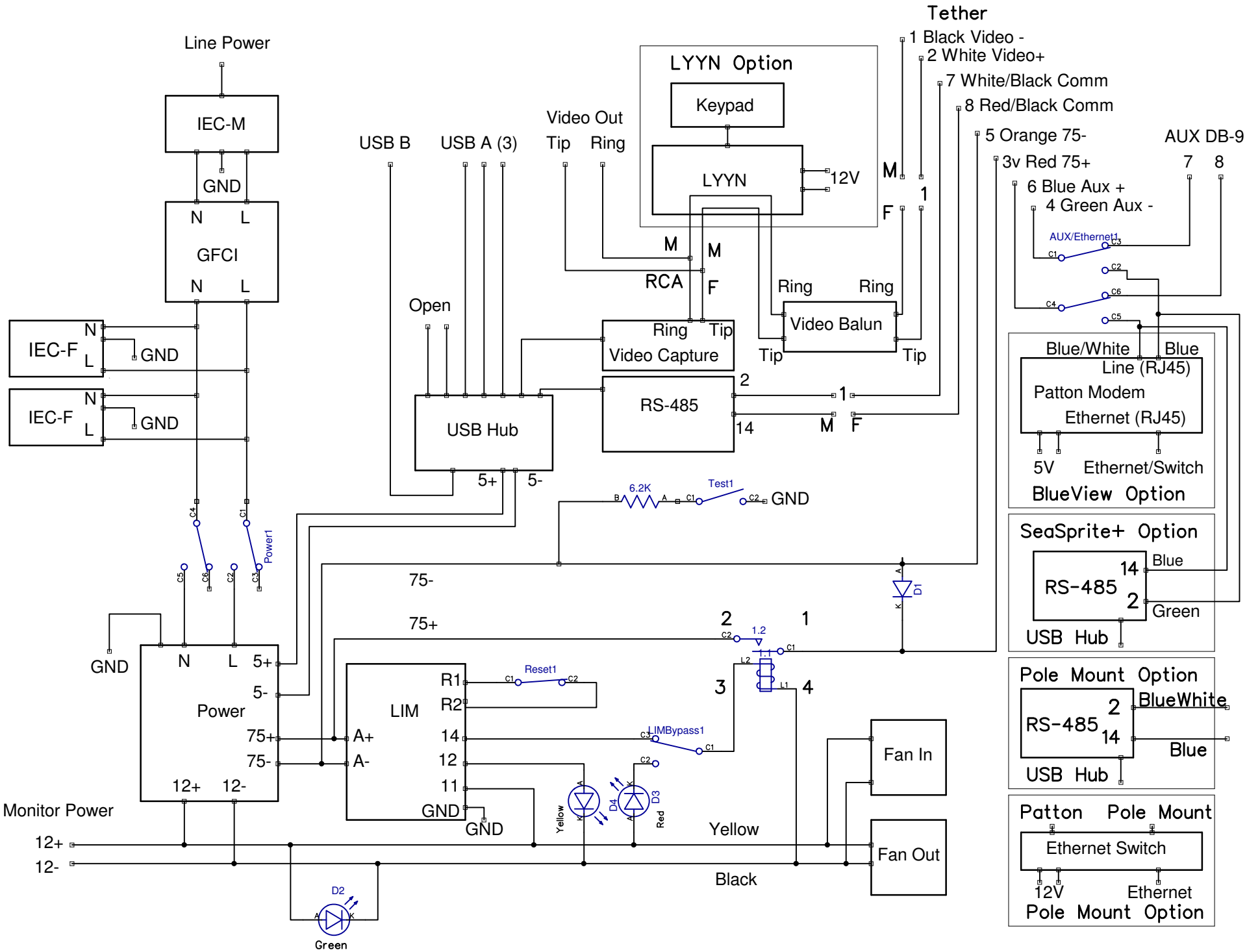

Fully Optioned Pro 4 Control Panel